D1

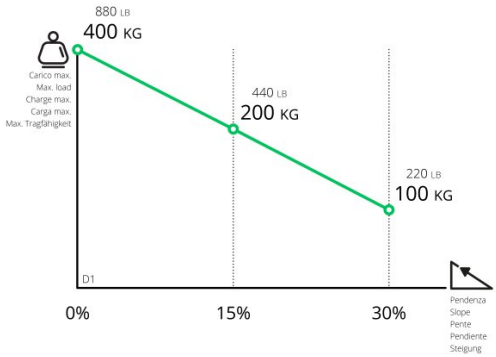



Technical drawing



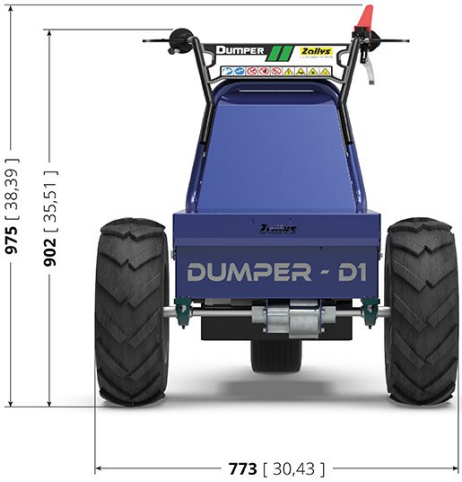

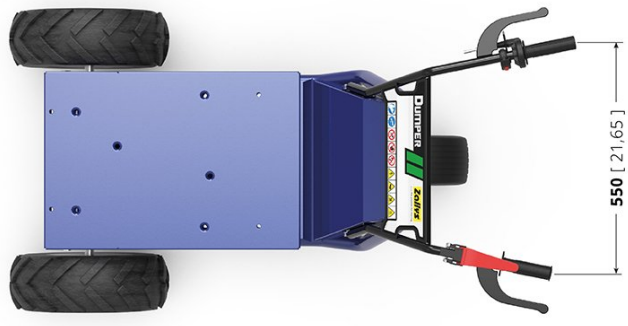



D1


761 [29,95]
98 [3,85]
429 [16,89]
139 [5,45]
761 [29,95]
1208 [47,56]
1399 [55,08]

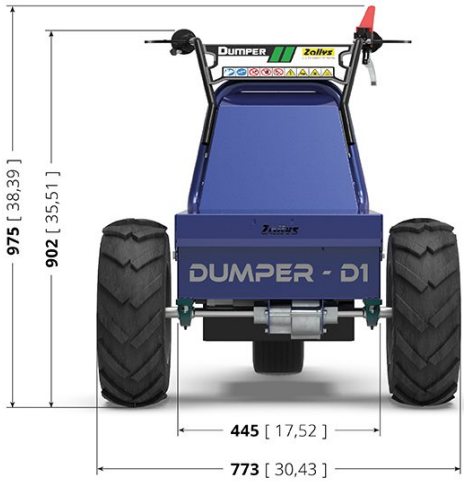
975 [38,39]
902 [35,51]
DUMPER - D1
445 [17,52]
773 [30,43]

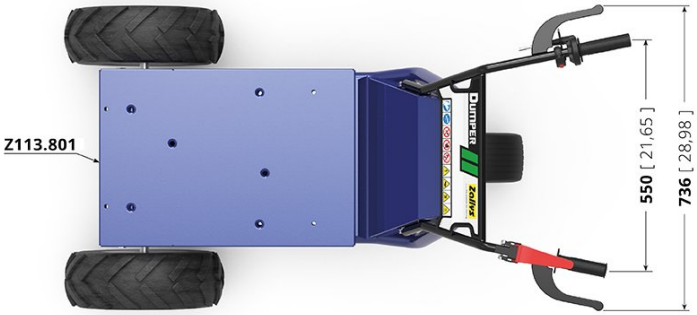
Z113.801
550 [21,65]
736 [28,98]



Technical data

1. Frame characteristics

Réf.no.	Description		
1.80	Frame made of		Steel
1.82	Anti-Corrosion Treatment (on customer demand only)		Cataphoresis
1.83	Frame treatment		Polyester powder coating

2. Safety data

Réf.no.	Description		
2.01	Dead man safety system		Safety lever
2.05	Operator safety features		Hand guards
2.06	Power supply disconnection device / Emergency stop		Detachable power connector
2.11	Drive controls		Maintained action switch
2.20	Handarm vibration	m/s²	<2,5
2.22	Noise level at operator’s ears	dB	<70

3. Performances

Réf.no.	Description		
3.01	Max. forward speed	km/h	5,0
3.04	Max. backward speed	km/h	4,0
3.11	Max.load capacity on flat ground	kg	400
3.28	Max.slope with load *	%	30
3.39	Stopping distance in deceleration (without load)	m	1

Réf.no.	Description
3.42	* Load capacity is subject to kind of slope , kind of floor and operating time
3.46	The towing capacity values indicated in the graph are for non-continuous use and may vary depending on the type of work and the external temperature.

4. Drive controls

Réf.no.	Description		
4.01	Type of control		Tillers
4.02	Type of start control		handlebar gas-grip

5. Standard battery specifications

Réf.no.	Description		
5.01	Batteries		2
5.02	Batteries type		Traction AGM batteries
5.03	Battery voltage	V	12
5.04	Nominal Capacity 5 h	Ah	72
5.05	Nominal Capacity 20 h	Ah	96
5.06	Weight of each battery	kg	23

6. Available chargers

Réf.no.	Description		
6.41	Multitension	V	110/240
6.42	Plug		In use in the country of destination

6. Technical data of standard charger

Réf.no.	Description		
6.01	Battery charger		External - high frequency
6.02	Input voltage	V	110/240
6.03	Input Frequency	Hz	50-60
6.04	battery charger voltage type		Monophase
6.05	Battery charger capacity	Ah	8
6.06	Power consumption during complete charge cycle	kWh	2
6.07	Operating temperature	°C	-20 / +40
6.08	Operation display		Led
6.09	Input fuse	A	5
6.10	Cooling system		Ventilation cooling

Réf.no.	Description		
6.11	IP degrees of protection		IP20
6.12.1	Width	mm	95
6.12.2	Length	mm	185
6.12.3	Height	mm	55

7. Drive motor

Réf.no.	Description		
7.02	Motor code no.		M049.701
7.03	Engine		Electric
7.04	Electricity		Direct current
7.05	Engine voltage	V	24
7.06	Rating (S2 - 5')	kW	0,6
7.15	Maximum peak power	kW	1,6

8. Generic technical data

Réf.no.	Description		
8.01	Transmission system		Mechanical
8.02	Transmission lubrication		In oil bath
8.03	Gear reduction		1:26
8.04	Kind of oil		80W-90
8.05	Traction		Front-wheel drive
8.06	Service brake		Electronic
8.08	Parking brake		Electro-Mechanical
8.09	Tilting system of the skip		Manual

9. Weight

Réf.no.	Description		
9.01	Weight without batteries	kg	76
9.09	Weight incl. 72/96A AGM batteries	kg	122

10. Dimensions

Réf.no.	Description		
10.01	Length	mm	1.399
10.02	Width	mm	773
10.03	Height of start control	mm	902
10.08	Loading platform height	mm	429
10.14	Wheelbase	mm	761

Réf.no.	Description	U.M.	Valeur
10.15	Turning circle	m	2,20
10.50	**For further details please click on technical draws		

11. Standard wheels

Réf.no.	Description	U.M.	Valeur
11.01	Drive wheels		2
11.03	Pivoting wheels no.		1
11.05	Tyres		Pneumatic
11.07	Drive wheels type		Agricultural tires(tractor)
11.11	Pivoting wheel type		Grooved tyre
11.13	Drive tyres size		16-6.50-8"
11.17	Pivoting wheel size		13-5.00-6"
11.25	Inflation pressure	bar	1.5 / 2.2

11. Narrow track wheels

Réf.no.	Description	U.M.	Valeur
11.61	Tyres		Pneumatic
11.63	Drive wheels tires draw		Agricultural tyres(tractor)
11.68	Drive tyres size		4.00-8"