DUMPER-JET L

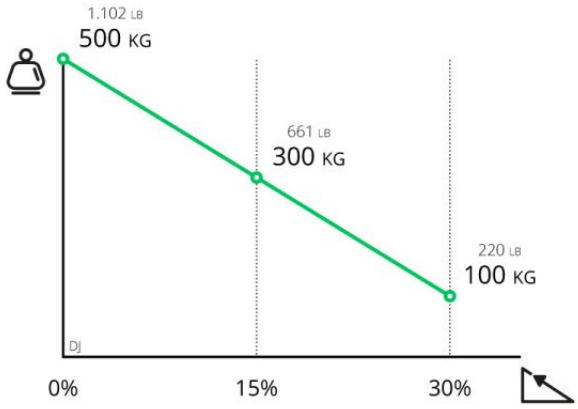
1.102 LB
500 KG
661 LB
300 KG
220 LB
100 KG
DJ
0%
15%
30%


DUMPER-JET
Zollys


445 [17,53]
166 [6,55]
828 [32,59]
1621 [63,81]
Zollys


1001 [39,41]
928 [36,54]
780 [30,70]
DUMPER JET
Zollys

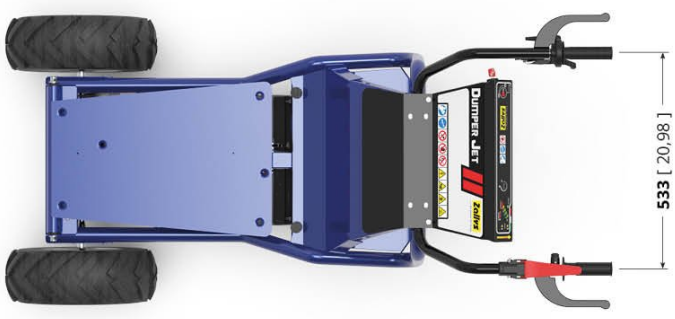
533 [20,98]
Dumper Jet
Zollys


DUMPER JET
Zollys

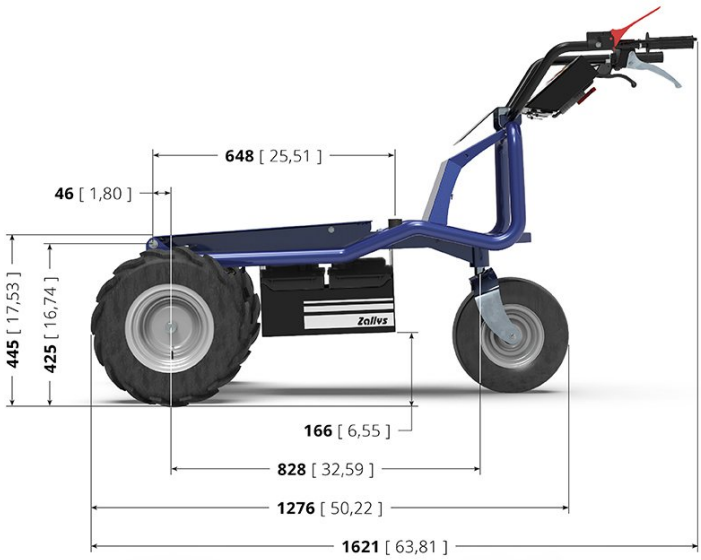
648 [25,51]
46 [1,80]
445 [17,53]
425 [16,74]
166 [6,55]
828 [32,59]
1276 [50,22]
1621 [63,81]
Zollvs

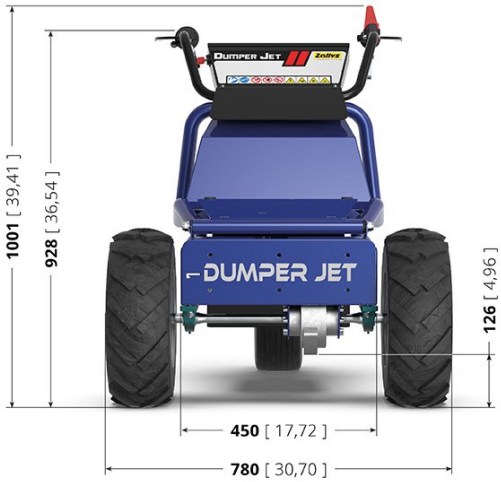
1001 [39,41]
928 [36,54]
126 [4,96]
450 [17,72]
780 [30,70]
DUMPER JET

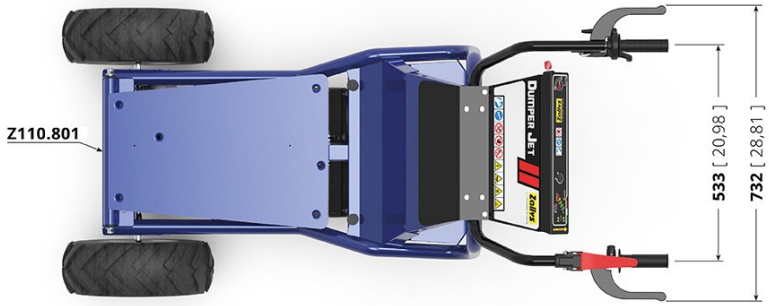
Z110.801
533 [20,98]
732 [28,81]
DUMPER JET


DUMPER JET

Technical data

1. Characteristics

Réf.no.	Description		
1.01	Model number		Z110.721-16===
1.02	Model name		DUMPER-JET L
1.03	Manufacturer		Zallys
1.04	Operator		Pedestrian
1.05	Power unit		Electric
1.07	CE certification		
1.08	Plant tension	V	24
1.09	Nominal power	kW	1,00

1. Frame characteristics

Réf.no.	Description		
1.80	Frame made of		Steel
1.82	Anti-Corrosion Treatment (on customer demand only)		Cataphoresis
1.83	Frame treatment		Polyester powder coating

2. Safety data

Réf.no.	Description		
2.01	Dead man safety system		Safety lever
2.05	Operator safety features		Hand guards
2.06	Power supply disconnection device / Emergency stop		Detachable power connector
2.11	Drive controls		Maintained action switch
2.20	Handarm vibration	m/s²	<2,5
2.22	Noise level at operator’s ears	dB	<70

3. Performances

Réf.no.	Description		
3.01	Max. forward speed	km/h	5,5
3.04	Max. backward speed	km/h	4,0
3.11	Max.load capacity on flat ground	kg	500
3.28	Max.slope with load *	%	30
3.39	Stopping distance in deceleration (without load)	m	1,1

Réf.no.	Description
3.42	* Load capacity is subject to kind of slope , kind of floor and operating time
3.46	The towing capacity values indicated in the graph are for non-continuous use and may vary depending on the type of work and the external temperature.

4. Drive controls

Réf.no.	Description		
4.01	Type of control		Tillers
4.02	Type of start control		handlebar gas-grip

5. Standard battery specifications

Réf.no.	Description		
5.01	Batteries		2
5.02	Batteries type		Traction GEL batteries
5.03	Battery voltage	V	12
5.04	Nominal Capacity 5 h	Ah	105
5.05	Nominal Capacity 20 h	Ah	130
5.06	Weight of each battery	kg	33

6. Available chargers

Réf.no.	Description		
6.41	Multitension	V	110/240
6.42	Plug		In use in the country of destination

6. Technical data of standard charger

Réf.no.	Description		
6.01	Battery charger		External - high frequency
6.02	Input voltage	V	230
6.03	Input Frequency	Hz	50-60
6.04	battery charger voltage type		Monophase
6.05	Battery charger capacity	Ah	12
6.06	Power consumption during complete charge cycle	kWh	2
6.07	Operating temperature	°C	-20 / +40
6.08	Operation display		Led
6.09	Input fuse	A	5
6.10	Cooling system		Ventilation cooling

Réf.no.	Description		
6.11	IP degrees of protection		IP20
6.12.1	Width	mm	95
6.12.2	Length	mm	185
6.12.3	Height	mm	55

6. Optional charger specifications

Réf.no.	Description		
6.14	Charger suitable for AGM batteries of	A	50/70
6.18	Power consumption during complete charge cycle	kWh	2
6.19	**for all other details please refer to standard charger specifications		

7. Drive motor

Réf.no.	Description		
7.02	Motor code no.		M512.013
7.03	Engine		Electric
7.04	Electricity		Direct current
7.05	Engine voltage	V	24
7.06	Rating (S2 - 5')	kW	1
7.15	Maximum peak power	kW	2,20

8. Generic technical data

Réf.no.	Description	
8.01	Transmission system	Mechanical
8.02	Transmission lubrication	In oil bath
8.03	Gear reduction	1:32
8.04	Kind of oil	80W-90
8.05	Traction	Front-wheel drive
8.06	Service brake	Electronic
8.08	Parking brake	Electro-Mechanical
8.09	Tilting system of the skip	Semi-automatic and electronic

9. Weight

Réf.no.	Description		
9.01	Weight without batteries	kg	83
9.09.5	Weight incl. 105/130A AGM batteries	kg	149

DUMPER-JET L

10. Dimensions

Réf.no.	Description		
10.01	Length	mm	1.621
10.02	Width	mm	780
10.03	Height of start control	mm	928
10.08	Loading platform height	mm	445
10.14	Wheelbase	mm	828
10.15	Turning circle	m	2,60
10.50	**For further details please click on technical draws		

11. Standard wheels

Réf.no.	Description	
11.01	Drive wheels	2
11.03	Pivoting wheels no.	1
11.05	Tyres	Pneumatic
11.07	Drive wheels type	Agricultural tires(tractor)
11.11	Pivoting wheel type	Grooved tyre
11.13	Drive tyres size	16-6.50-8"
11.17	Pivoting wheel size	13-5.00-6"
11.25	Inflation pressure	bar 1.5 / 2.2

11. Narrow track wheels

Réf.no.	Description	
11.61	Tyres	Pneumatic
11.63	Drive wheels tires draw	Agricultural tyres(tractor)
11.68	Drive tyres size	4.00-8"