


# PANGEA

## ELECTRIC 4X4 UTILITY VEHICLE

ePOWER TRUCKS



WWW.EPOWERTRUCKS.CO.UK









# EFFICIENCY REDEFINED

Experience the ideal combination of power, durability, and eco-friendly operation with the Pangea range of vehicles. These electric 4x4s are engineered to tackle the toughest tasks while delivering a smooth and efficient ride. Whether you're working hard or exploring the great outdoors, the Pangea vehicles are your ultimate companions.

# PANGEA

The Pangea is designed to deliver exceptional power and performance in a compact and versatile 2-seater format. Equipped with a powerful 15kW motor, this electric 4x4 provides the strength and speed you need to conquer any terrain. Whether you're navigating rough trails or traversing agricultural landscapes, the Pangea ensures you get the job done efficiently.












WWW.EPOWERTRUCKS.CO.UK

# PANGEA

At the heart of the Pangea is a durable 76v lithium-ion battery, offering a range of over 40 miles on a single charge. This long-lasting battery ensures you have the power to go the distance, whether you're working on the farm, exploring off-road paths, or handling heavy loads.

- 2 PERSON CAPACITY
- UP TO 40 MILES RANGE
- 76.8V 173AH LITHIUM
- 72V 15KW MOTOR
- 30 MPH MAX SPEED
- 200 KG CAPACITY
  W - 1,100 MM / L - 745 MM

- H - 1,990 MM
  W - 1,640 MM
  L - 2,792 MM
- 30% INCLINE
- 72V 550 A CONTROLLER
- 4.8M TURNING RADIUS
- 1,918 MM WHEELBASE
- 500 KG TOWING CAPACITY

# PANGEA

We want to help you get the most from the Pangea. To do so, it's essential to understand its size and capabilities.

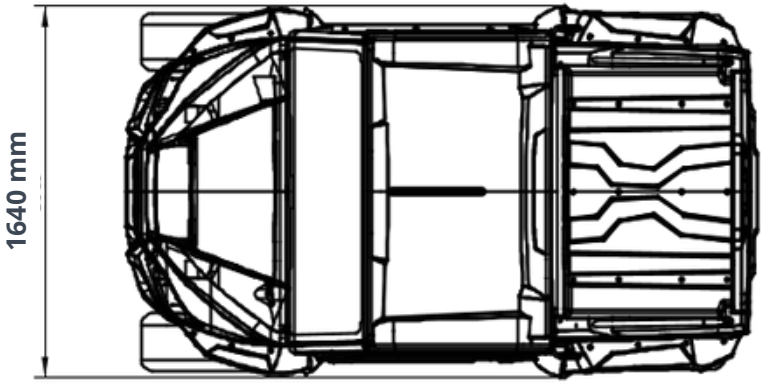


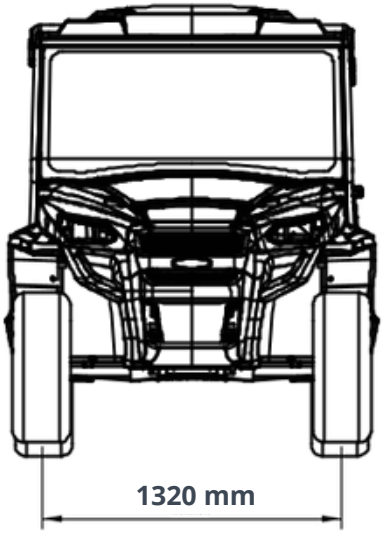


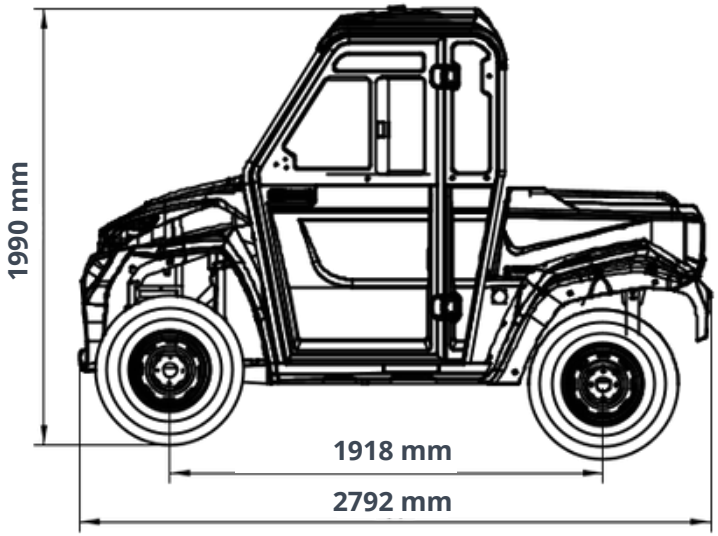

# PANGEA 4

The Pangea 4 is engineered to tackle tough terrain in various weather conditions. Its robust construction and high-performance motor make it ideal for challenging environments, from muddy fields to rocky trails. No matter the obstacle, the Pangea 4 is built to meet the challenge head-on.











WWW.EPOWERTRUCKS.CO.UK

# PANGEA 4

Equipped with a robust 15kW motor and a range of over 40 miles, the Pangea 4 boasts a long-lasting 76v lithium-ion battery. Whether traversing challenging terrain in any weather condition or transporting heavy loads across agricultural landscapes, the Pangea 4 is up to the challenge.

- 4 PERSON CAPACITY
- UP TO 40 MILES RANGE
- 76.8V 173AH LITHIUM
- 72V 15KW MOTOR
- 30 MPH MAX SPEED
- 200 KG CAPACITY
  W - 1,100 MM / L - 745 MM

- H - 2,050 MM
  W - 1,640 MM
  L - 3,626 MM
- 30% INCLINE
- 72V 550 A CONTROLLER
- 6.4M TURNING RADIUS
- 2,752 MM WHEELBASE
- 500 KG TOWING CAPACITY

# PANGEA

WWW.EPOWERTRUCKS.CO.UK

We want to help you get the most from the Pangea. To do so, it's essential to understand its size and capabilities.

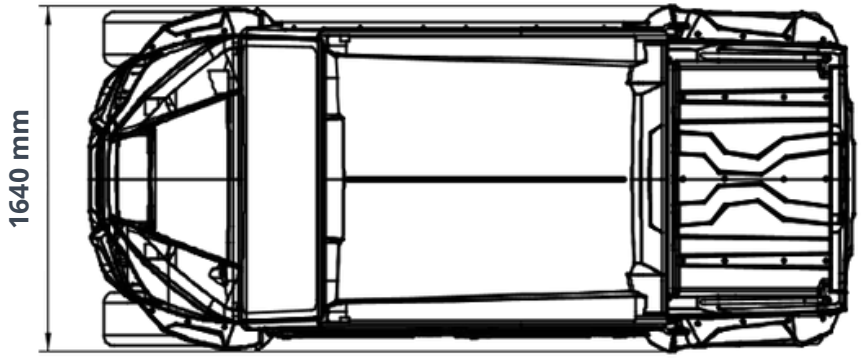


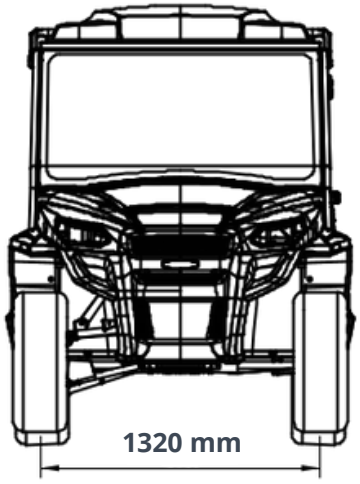


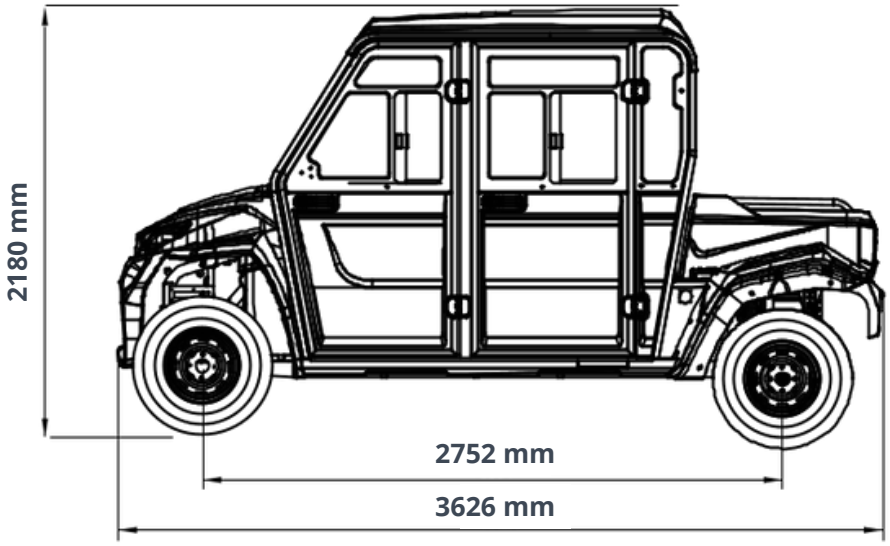




For more information call **0161 626 9628**

Discover the full range at **www.ePowerTrucks.co.uk**